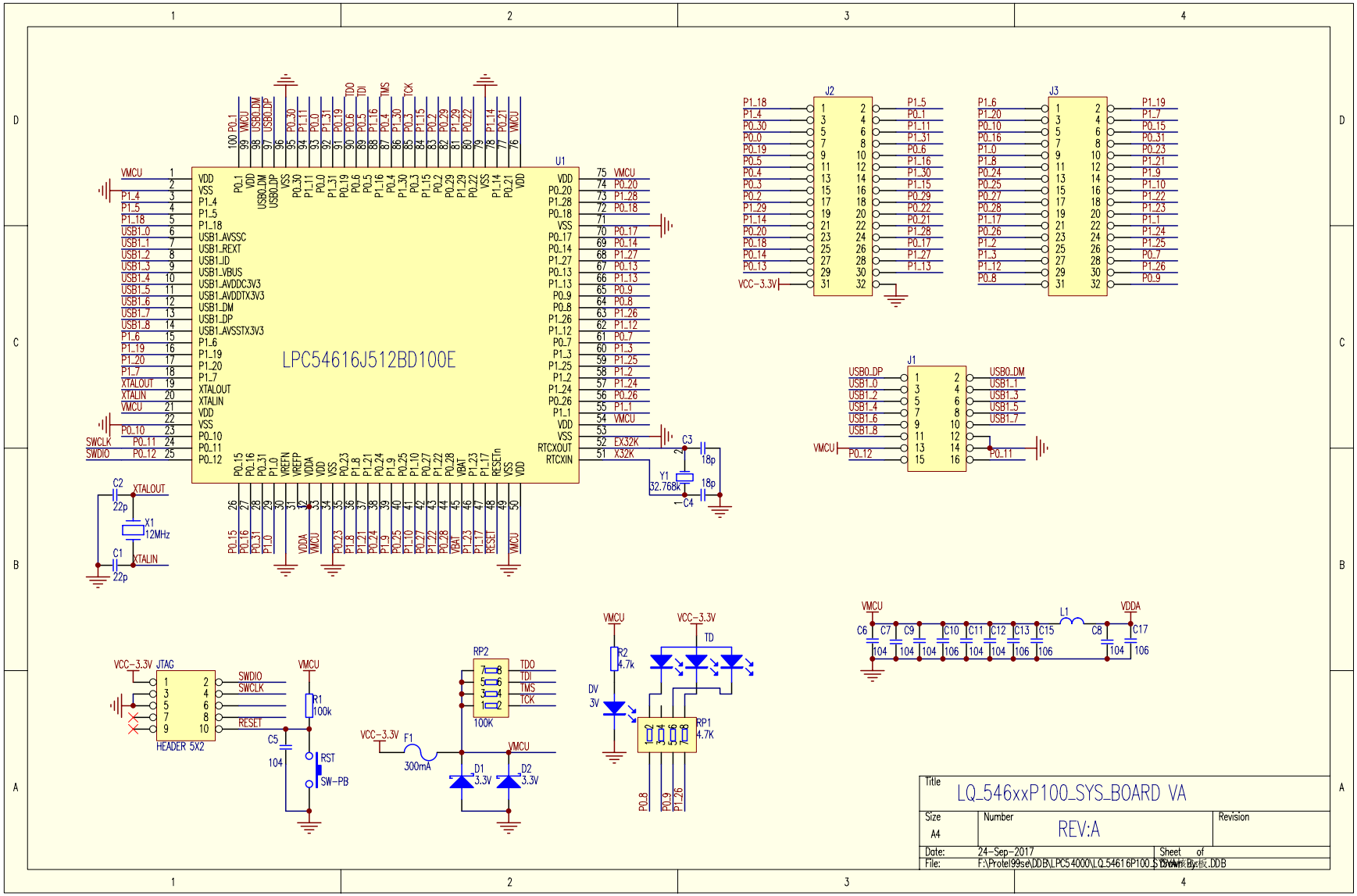
LPC54616J512BD100E
U1
J1
J2
J3
HEADER 5X2
JTAG
RP1
RP2
Title
LQ_546xxP100_SYS_BOARD VA
Size
A4
Number
REV:A
Revision
Date: 24-Sep-2017
File: F:\Protel99se\DDB\LPC54000\LQ_54616P100_SYS_BOARD_VA.DDB
Sheet of
Drawn By: